LP Series-General Purpose
LP12-24H(12V24Ah)

LEOCH BATTERY

Specifications

Rated Voltage		12V
Nominal Capacity	24.0Ah	(C_{20},1.75V/cell)
Dimension	Length Width Container Height Total Height	164±2mm (6.46 inches) 125±2mm (4.92 inches) 174±2mm (6.85 inches) 174±2mm (6.85 inches)
Approx Weight		8.45 Kg (18.6 lbs)
Terminal		M5
Container Material		ABS
Rated Capacity (25°C)	24.0 Ah 22.3 Ah 20.4 Ah 18.4 Ah 15.1 Ah	(20hr,1.20A,1.75V/cell) (10hr,2.23A,1.75V/cell) (5hr,4.08A,1.75V/cell) (3hr,6.12A,1.75V/cell) (1hr,15.1A,1.60V/cell)
Max. Discharge Current		360A (5s)
Internal Resistance (25°C)		Approx 15mΩ
Operating Temp.Range	Discharge Charge Storage	-15 ~ 50°C (5 ~ 122°F) 0 ~ 40°C (32 ~ 104°F) -15 ~ 40°C (5 ~ 104°F)
Nominal Operating Temp. Range		25±3°C (77±5°F)
Cycle Use	Initial Charging Current less than 7.2A. Voltage 14.4V~15.0V at 25°C(77°F)Temp. Coefficient -30mV/°C	
Standby Use	Initial Charging Current less than 7.2A. Voltage 13.5V~13.8V at 25°C(77°F)Temp. Coefficient -20mV/°C	
Effect of temp. to Capacity	40°C (104°F) 25°C (77°F) 0°C (32°F)	103% 100% 86%
Self Discharge	LP series batteries may be stored for up to 6 months at 25°C(77°F) and then a freshening charge is required. For higher temperatures the time interval will be shorter.	

Layout

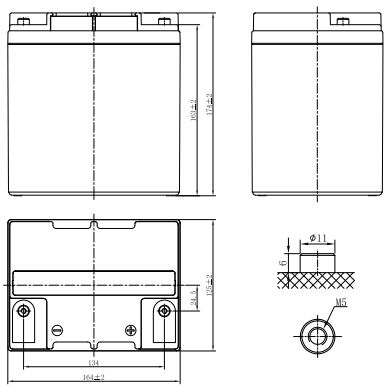

Constant Current Discharge (Amperes) at 25 °C (77°F)

F.V/Time	5min	10min	15min	20min	30min	45min	1h	1.5h	2h	3h	4h	5h	6h	8h	10h	20h
1.85V/cell	64.5	47.2	39.2	32.9	24.3	17.2	13.6	10.3	7.87	5.93	4.82	3.97	3.45	2.68	2.18	1.17
1.80V/cell	69.4	50.0	41.2	34.2	25.1	17.7	14.0	10.5	8.02	6.02	4.89	4.03	3.50	2.72	2.21	1.19
1.75V/cell	73.1	52.0	42.5	35.1	25.8	18.0	14.3	10.7	8.16	6.12	4.96	4.08	3.54	2.75	2.23	1.20
1.70V/cell	76.5	54.1	44.0	36.2	26.4	18.4	14.5	10.9	8.28	6.21	5.03	4.14	3.58	2.78	2.25	1.21
1.67V/cell	79.2	55.6	45.1	36.9	26.9	18.7	14.7	11.0	8.37	6.27	5.08	4.17	3.61	2.80	2.27	1.22
1.60V/cell	84.0	58.0	46.6	38.0	27.6	19.2	15.1	11.2	8.54	6.39	5.17	4.24	3.67	2.84	2.30	1.23

Constant Power Discharge (Watts/cell) at 25 °C (77°F)

F.V/Time	5min	10min	15min	20min	30min	45min	1h	1.5h	2h	3h	4h	5h	6h	8h	10h	20h
1.85V/cell	122.0	89.8	75.1	63.3	47.1	33.3	26.5	20.1	15.4	11.6	9.51	7.84	6.82	5.32	4.33	2.35
1.80V/cell	129.9	94.6	78.4	65.5	48.3	34.1	27.1	20.4	15.7	11.8	9.62	7.94	6.91	5.39	4.39	2.37
1.75V/cell	135.4	97.7	80.5	67.0	49.3	34.7	27.5	20.7	15.9	12.0	9.74	8.03	6.98	5.44	4.42	2.40
1.70V/cell	140.4	100.9	82.7	68.5	50.4	35.4	28.0	21.0	16.1	12.1	9.86	8.13	7.06	5.49	4.47	2.42
1.67V/cell	144.1	103.1	84.5	69.8	51.1	35.8	28.3	21.3	16.2	12.2	9.94	8.19	7.12	5.53	4.50	2.44
1.60V/cell	149.9	106.1	86.8	71.5	52.3	36.5	28.8	21.6	16.5	12.4	10.1	8.30	7.20	5.61	4.55	2.47

LP Series-General Purpose
LP12-24H(12V24Ah)

LEOCH BATTERY

Applications

- All purpose
- Uninterruptable Power Supply (UPS)
- Electric Power System (EPS)
- Emergency backup power supply
- Alarm and security system
- Communication power supply
- DC power supply
- Auto control system

General Features

- 5 years design life(25℃)
- Special exhaust structure and sealing technology, safe and reliable, flexible installation, convenient maintenance
- PbCaSn alloy for plate grids: less gassing, less self-discharging
- High quality AGM separator: extend cycle life and prevent micro short circuit
- High purity raw material: ensure low self discharge rate

Standards

- Compliance with IEC 60896 standards, EU Battery Directive
- UL, CE Certified
- Manufactured in Leoch®IATF16949, ISO45001,ISO 9001 and ISO 14001 certified production facilities

Discharge Characteristics

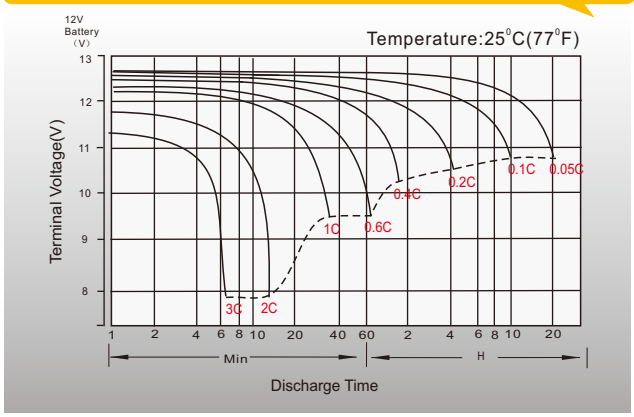

Float Charging Characteristics

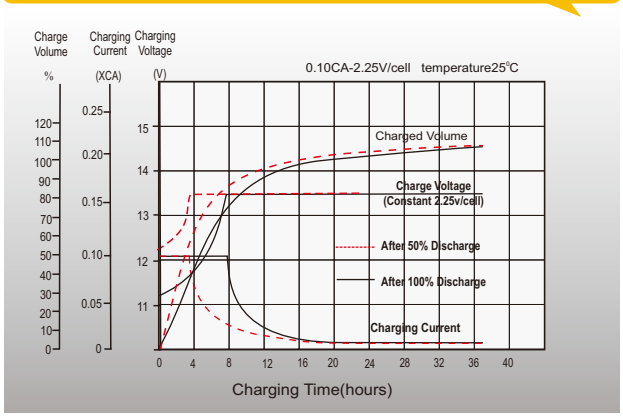

Temperature Effects in Relation to Battery Capacity

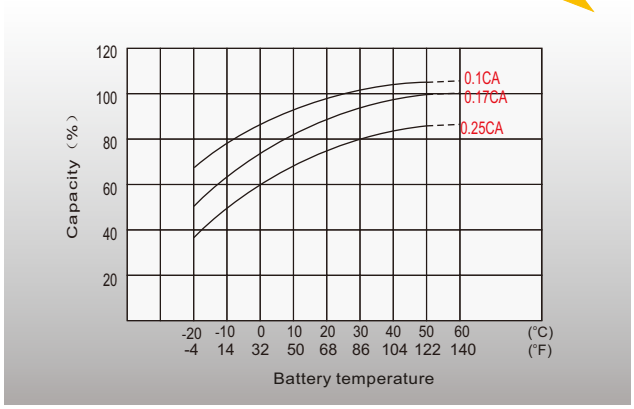

Float Service Life

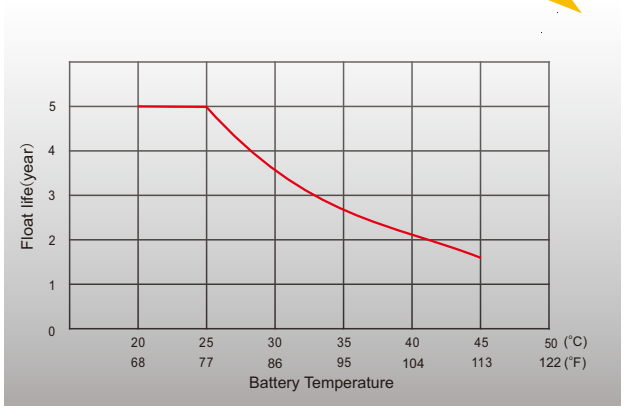

Sales Offices Worldwide

China Sales Office

5th Floor, Xinbaohui Bldg., Nanhai Blvd., Nanshan, Shenzhen, China. 518052
Tel: +86-755-86036060 (100 lines)
Fax: +86-755-26067269
E-mail:export@leoch.com

HongKong Sales Office

Workshop C, 33/F, TML Tower, No. 3 Hoi Shing Road, Tsuen Wan, New Territories, Hong Kong
Tel: +852 35786666
Fax: +44 1452 690125
E-mail: sales.hk@leoch.com

Singapore Sales Office

No. 1 Tech Park Crescent, Singapore 638131
Tel: +65 68636078
Fax: +65 6863 6079
Email: sales.sg@Leoch.com

Australia Sales Office

2 /29 Tarlington Place, Smithfield. NSW 2164 Australia
Tel: 02 9756 0950
E-mail: sales.au@leoch.com

North America Sales Office

19751 Descartes
Foothill Ranch, CA 92610, USA
Tel: 949-588-5853
Fax: 949-588-5966
E-mail: sales@leoch.us
Http:// www.leoch.us

UK Sales Office

9B Wheatstone Court. Waterwells, Business Park, Gloucester, GL2-2AQ, UK United Kingdom
Tel: +44(0) 1452 729428 / 1452 729696
Fax:+44 1452 690125
E-mail: Sales.Europe@leoch.com
Http:// www.leoch.eu

EMEA Sales Office

1 Deligiorgi St., 121 31 Athens, Greece
Tel: +30 210 5760318 (2 lines)
E-mail: support_EMEA@leoch.com
Http:// www.leoch.eu

India Sales Office

Shed no.A-53(b), 2nd Stage of Peenya Industrial Area, Bangalore North Taluk, Bangalore-560058, India
Tel: +91-80-23440018/23440019
Fax: +91-80-23440017
E-mail: indiasales@leoch.com

Http://www.leoch.com

© 2020 LEOCH. All rights reserved.
Trademarks and logos are the property of LEOCH and its affiliates unless otherwise noted.
Subject to revisions without prior notice.

Publication No.: LB-LP12-24H-PD-EN-V2.0-202004